FCIconnect.com

PRODUCT NUMBER	PITCH
KDxx10x1A0J0G	3.50 mm

Dim L=(N/2-1)×3.5+4.2
Dim P=(N/2-1)×3.5
Dim A=(N/2-1)×3.5+8.6
Dim B=(N/2-1)×3.5+13.8

N=Number of poles

POLES	Tolerance
2×2P-2×6P	±0.15
2×7P-2×12P	±0.25
2×13P-2×18P	±0.30
2×19P-2×24P	±0.40

PART NO.: KD xx 1 0 x 1 A0J0 G

Solid block
No. of poles
04 2x2 poles
06 2x3 poles
... ...
48 2x24 poles

Housing Color
0 Black (RAL9005)
5 Green(RAL6018/T)
6 Blue (RAL5015/A)
8 Grey(RAL7035/D)

RoHS compliant
(lead<4%)
In copper Alloy

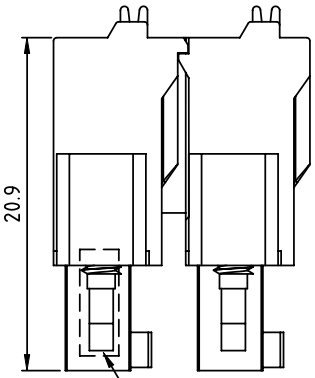

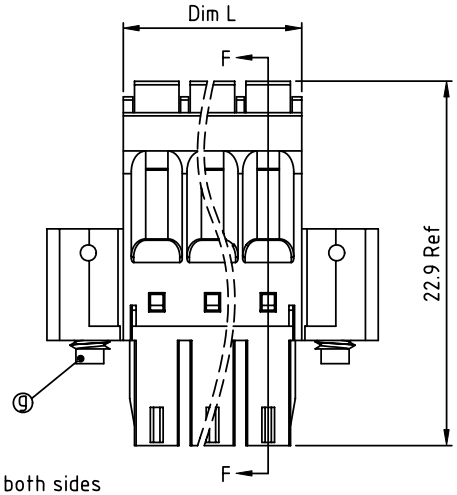

2x2P-2x6P Ribs on both sides
2x7P-2x24P No rib

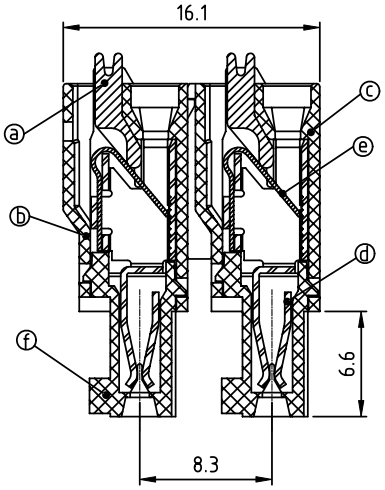

SECTION F-F

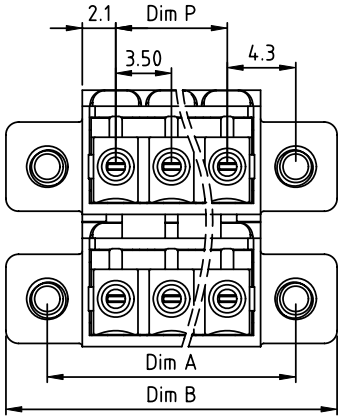

Material:
- Item ⓐ Terminal lever: Thermoplastic (UL94V-0) Orange (RAL2011/P)
- Item ⓑ Top housing: Thermoplastic (UL94V-0)
- Item ⓒ Terminal back housing: Thermoplastic (UL94V-0)
- Item ⓓ Female contact: PhBz, Bright Tin plated over Nickel [lated
- Item ⓔ Spring clamp: Stainless steel
- Item ⓕ Bottom housing: Thermoplastic (UL94V-0)
- Item ⓖ Flange screw:Steel Zinc plating M2.5"+/-" combination type

Electrical:	cULus
Voltage rating:	160 V
Current rating:	5.5 A
Wire range:	
Solid wire(AWG):	16-24
Stranded wire(AWG):	16-24
Wire strip length:	9-10 mm
Withstanding Voltage:	1.32 KV
Operating temperature:	-40°C to +115°C
Safety Approval:	

mat'l. code				surface ASME Y14.5	tolerance ASME Y14.5	projection	product family TERMINAL BLOCK
ltr	ecn no	dr	date	tolerances unless otherwise specified			title
B	T-24176	HF	052816	angles X°±1° / linear X.±0.5, X.X±0.3, X.XX±0.1		MM	TERMINAL BLOCK
						scale	SPRING CLAMP,PLUGGABLE PLUG,WITH FLANGE,DOUBLE LEVEL
				dr	EVIN ZHONG 052014		dwg no KDxx10x1A0J0G — sheet 1 of 1 — size A4
				engr	EVIN ZHONG 052014		
				chr	HANKE FENG 052014		
				appd	SHI JUN 052014		type CUSTOMER Drawing
sheet index	revision B	sheet 1					